Paraline drawings

Objectives

- Paraline drawing
  - Isometric and Axonometric
  - Exploded Isometric drawing
- Paraline drawing - Line weights
  - Exercise
- Kitchenette
  - Exercise
  - Homework #2

Isometric

- Paraline drawings
  - another method used for 3D presentation drawings
  - The view is not as realistic as a perspective
  - quick and easy to convey idea
    - To show the design of an interior room

- Isometric
  - both length and width are at the same angle, which are typically 30/30, 45/45, and 60/60 degrees
  - all the vertical and horizontal lines represent the true dimension

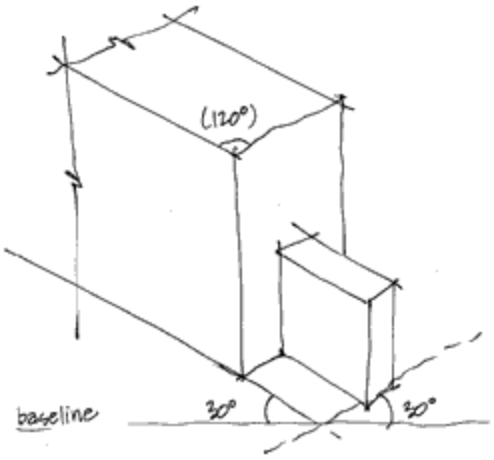

30°/30° Isometric

- All lines are kept parallel to each other
- Using a scale to draw the image keeps it in proportion

- Isometric 30/30 and 45/45
  - Sketch both images (10 Minutes)

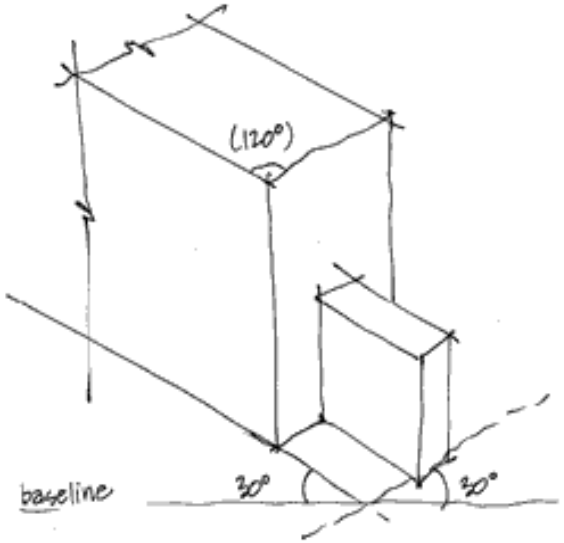

30°/30° Isometric

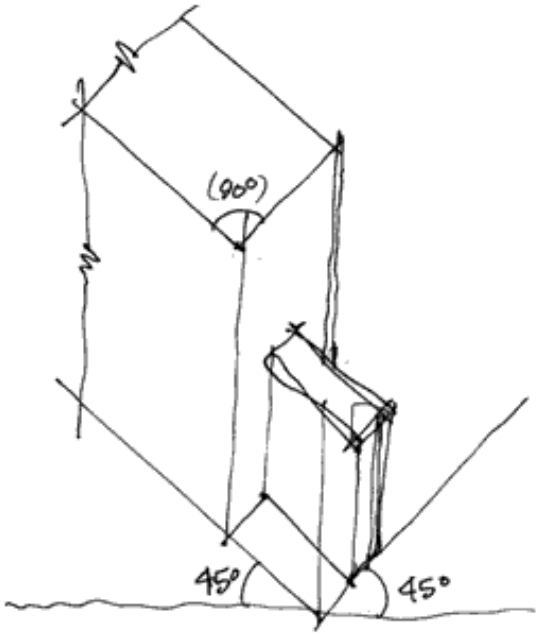

45°/45° isometric

Axonometric

- Axonometric
  - Sketch this image (5 Minutes)

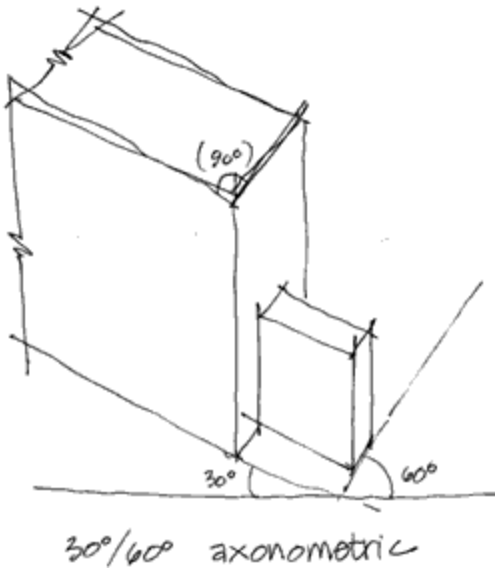

- Both length and width are not at the same angle, which is typically at 30/60 degrees or vice versa 60/30
- All the vertical and horizontal lines represent the true dimension

Exercise 1

- Draw a cube in
  - Axonometric 60/30
  - Isometric - symmetrical
    - Isometric in 45/45
    - Isometric in 30/30
- Show line weights

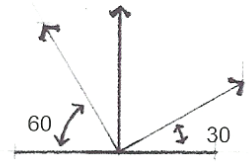

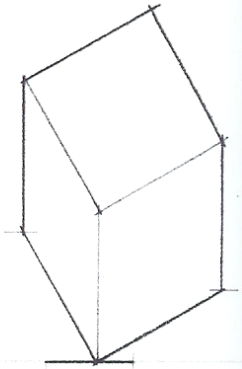

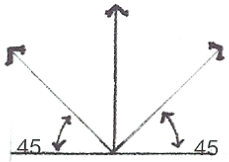

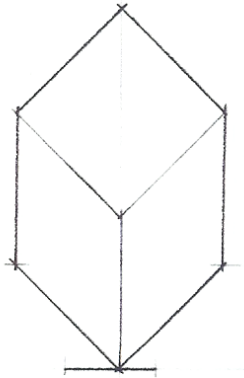

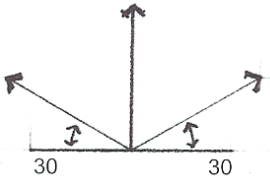

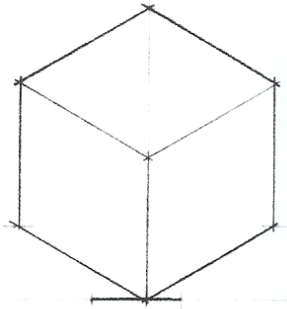

Exercise 2

- Draw a rectangular box in
  - Axonometric 60/30
  - Isometric - symmetrical
    - Isometric in 45/45
    - Isometric in 30/30
- Show line weights

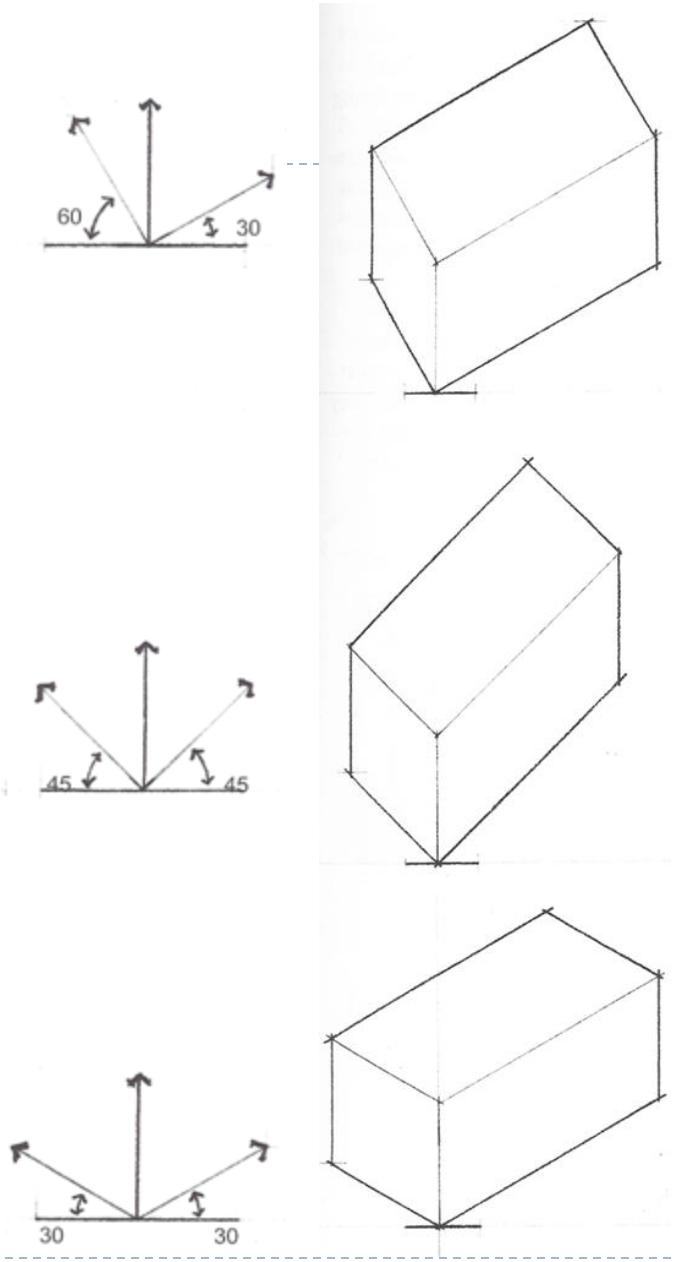

Homework 1- Exploded Paraline drawing

- Isometric with 30/30
- Can use drafting tools
- Visually communicate different planes and the spatial relationship between spaces
  - Construction lines are used to connect exploded objects back to the primary form
- Estimate the size of this form
- Show profile lines

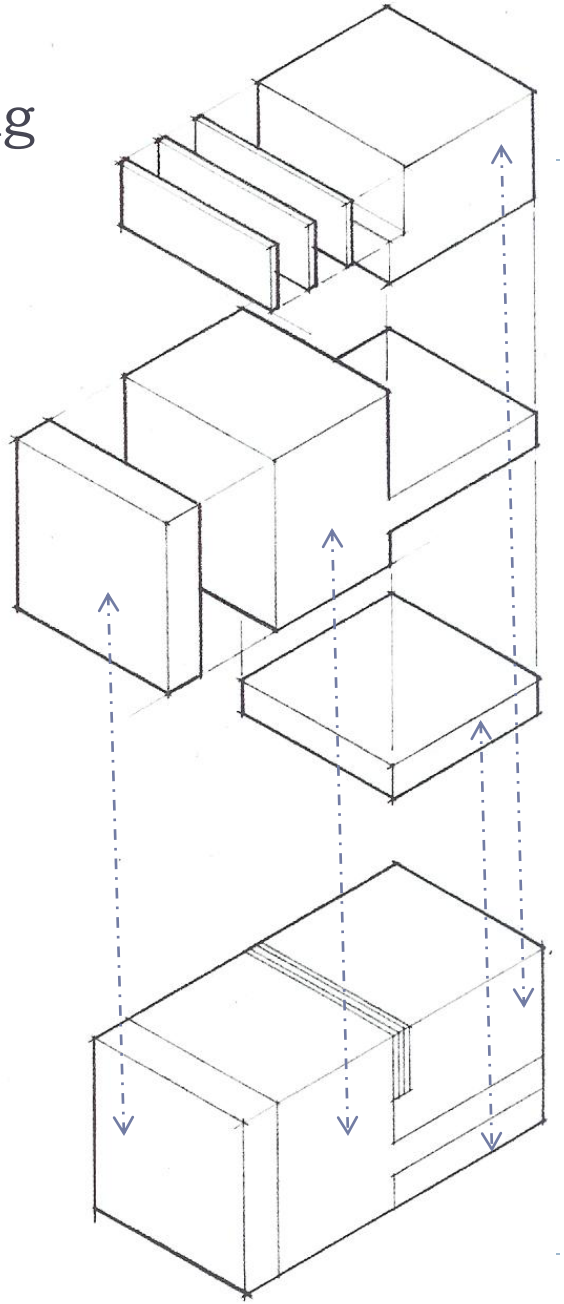

Study of the Interior space relationships

Exploded Paraline drawing

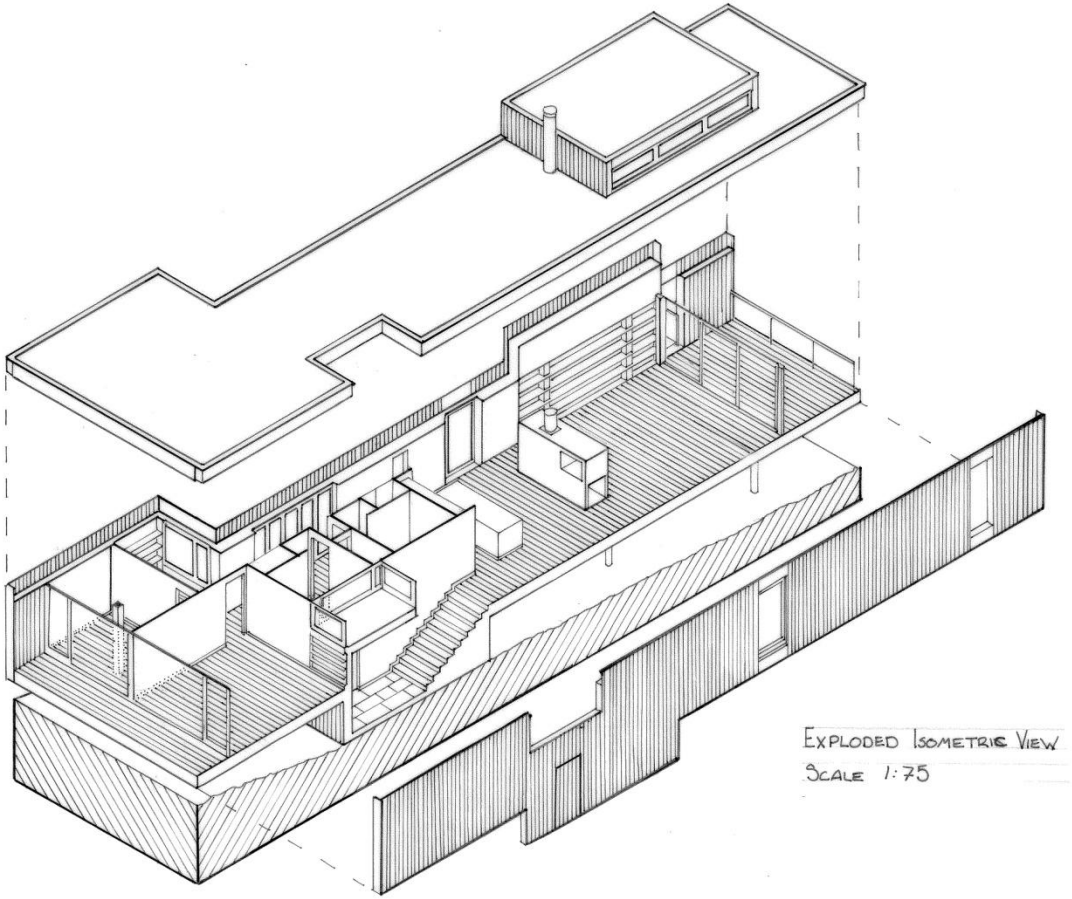

Exercise 3 - Paraline drawing - line weights

- Sketch this drawing and show line weights
  - Heavy Line - Profile line
  - Intermediate line
  - Light line

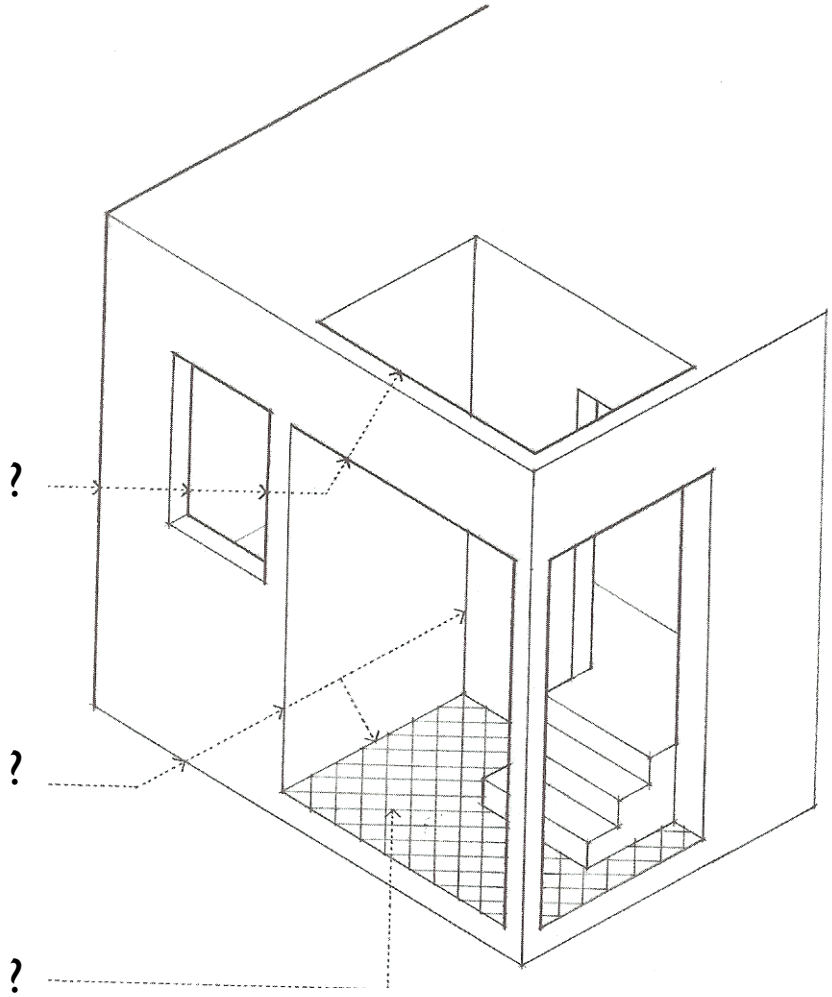

Paraline drawing - Line weight

- Sketch this drawing and show line weights
  - Lightest line
    - Tonal, value, hidden lines

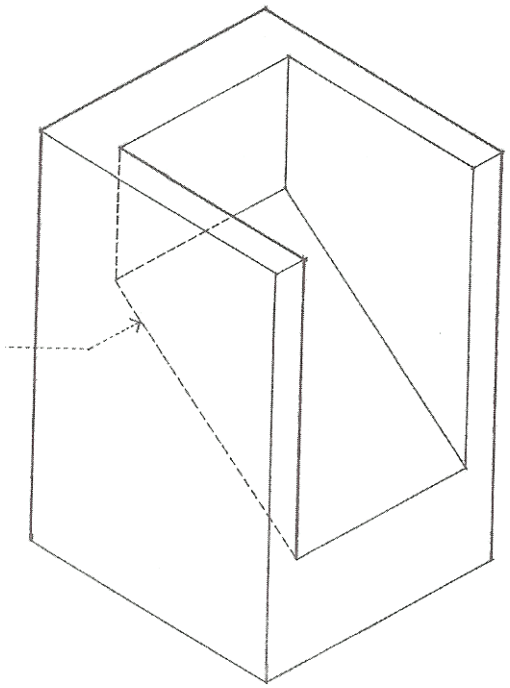

Exercise 4 - Method to construct Paraline drawings

- Additive method
  - Can be constructed in both Axonometric and Isometric
  - Construct this drawing in Axonometric 30/60
  - Draw the overall volume of this object
  - Then combine a series of volume to create the overall form by adding 2 cuboids
  - Show line weight variation
- Manipulate the volume

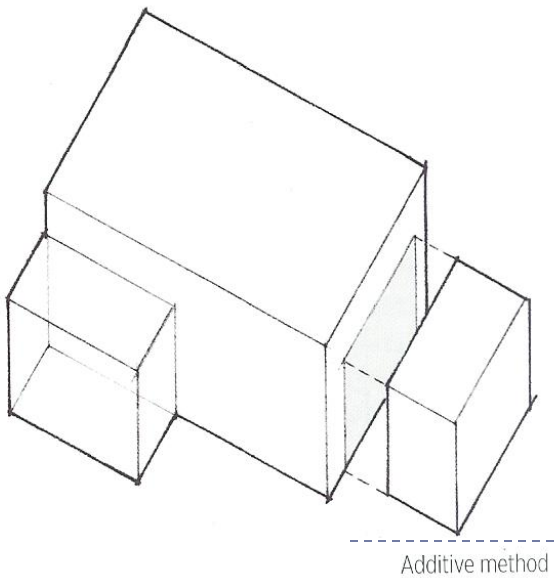

30/60

Axonometric

Exercise 5

- Subtractive method
  - Can be constructed in both Axonometric and Isometric
  - Construct this drawing in Axonometric 30/60
  - Draw the overall volume of an object
  - Then remove/subtract the portion of the solid volume
  - Show line weight variation
- Manipulate the volume

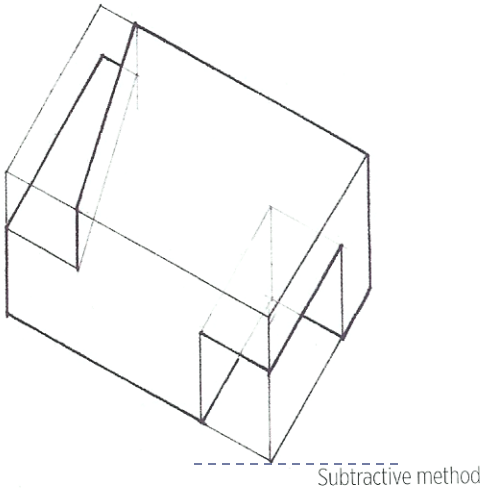

30/60

Axonometric

Exercise 6 – Isometric

- Scale: ½” = 1’- 0”
  - 18” each cabinet
  - 36”h x 24”d base cabinets
  - 30”h x 12”d wall cabinets
  - 1” thick countertop overhang 1”
  - 4” toe kick
  - 4” back apron
  - 6” Filler
  - Show line weight variation

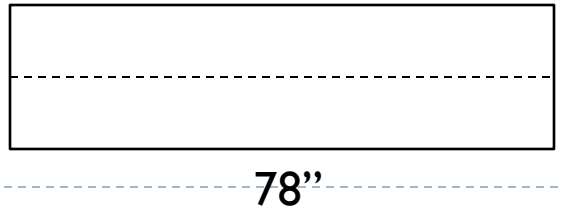

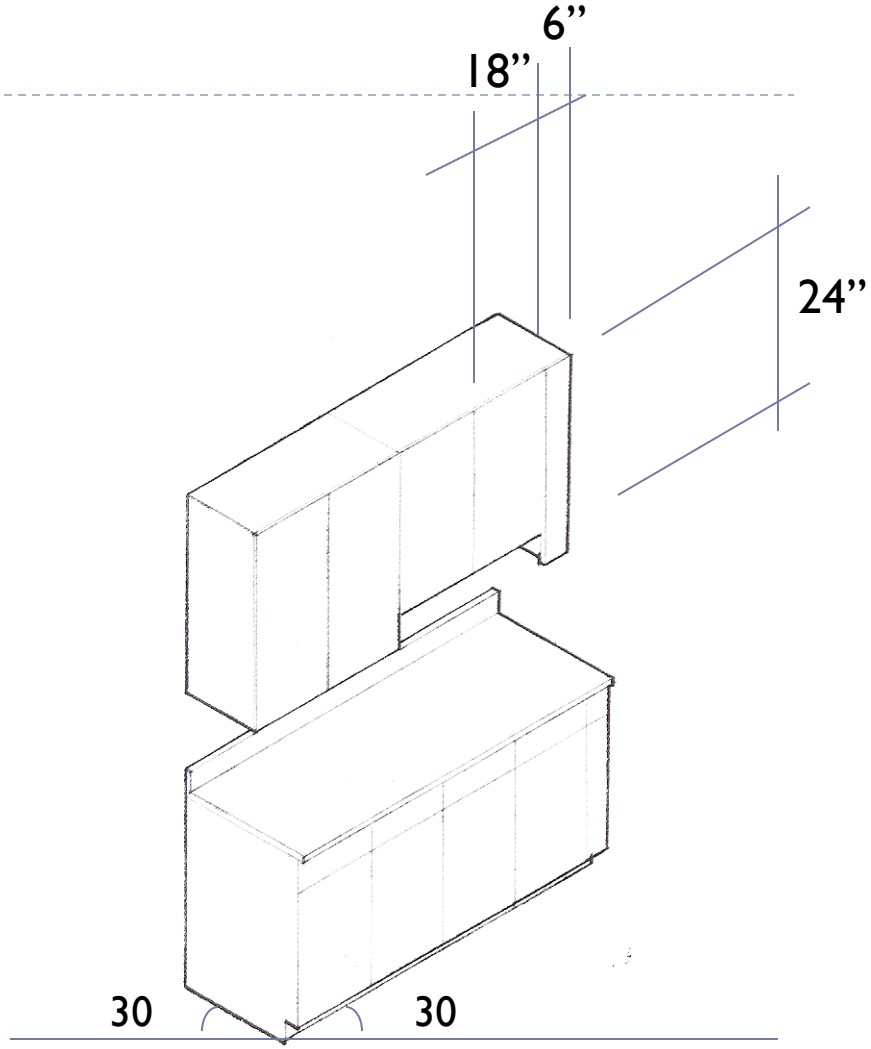

Homework 2 – adding details to Isometric

- Scale: ½” = 1’- 0”
  - 18” each cabinet
  - 36”h x 24” base cabinets
  - 30”h x 12” wall cabinets
  - 1” thick countertop
  - 4” toe kick
  - 4” countertop back apron
  - Single bowl sink 33” x 22 “x 10”d
  - Show line weight variation

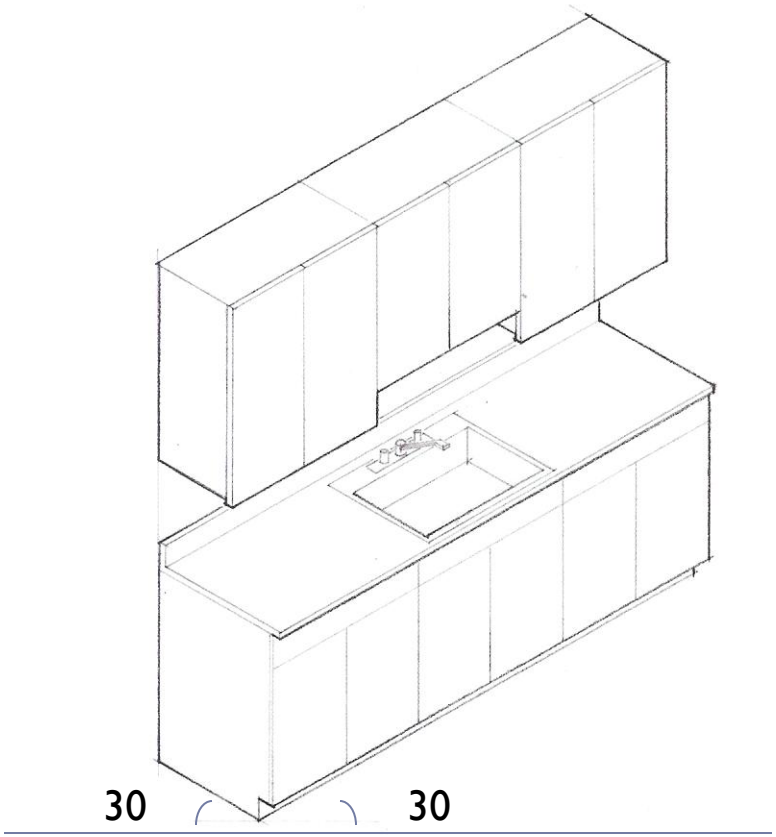

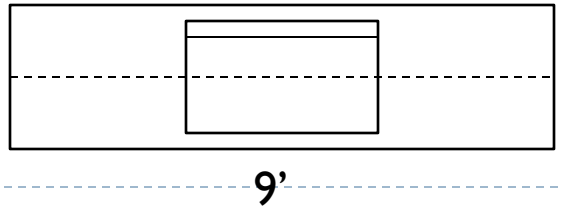

Example of isometric drawings

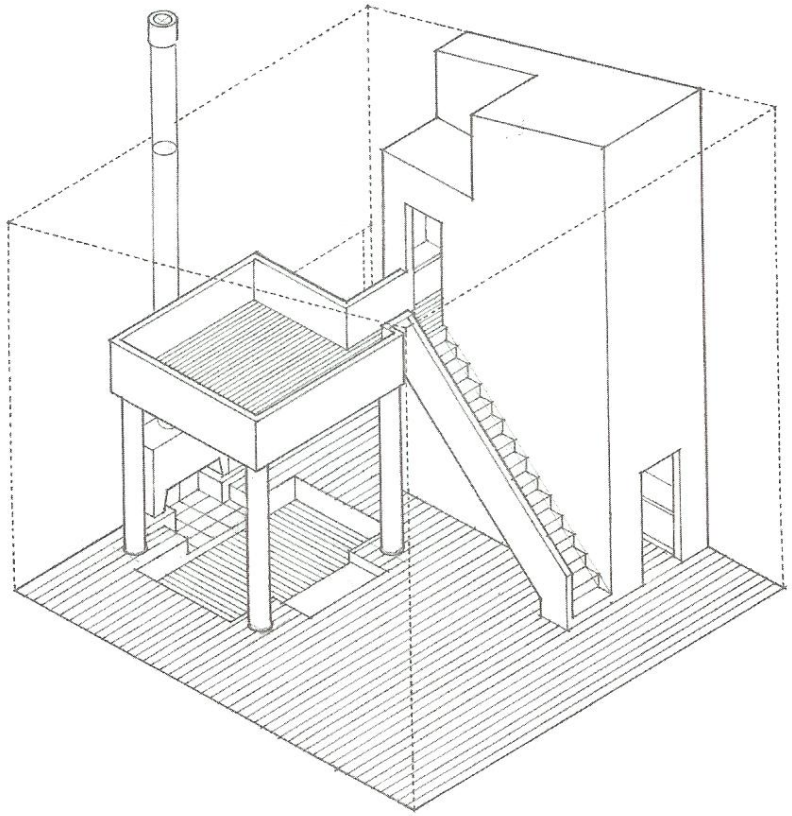

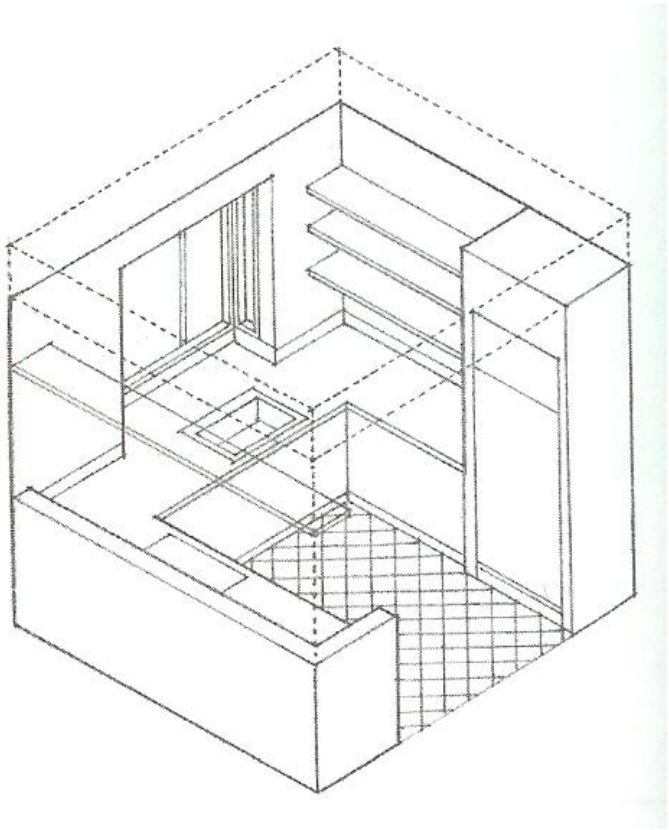

What have you learned?

- What is the difference between isometric and axonometric?
- What are the angles that you use to draw isometric and axonometric?