2-point perspective

Objectives

- Two point perspective using two vanishing points
- Object on HL, below, or above HL
- Sequences and steps how to draw a cube
- Perspective drawing
  - with all the surrounding planes
  - of letter 'L' and a cylinder
- Need to turn in - Dining table

Two-point perspective

- Two point perspective using two vanishing points
  - object looks even more realistic than if it were to be drawn with a single vanishing point
- The sides of the cube looks as if they are slowly fading away into the distance

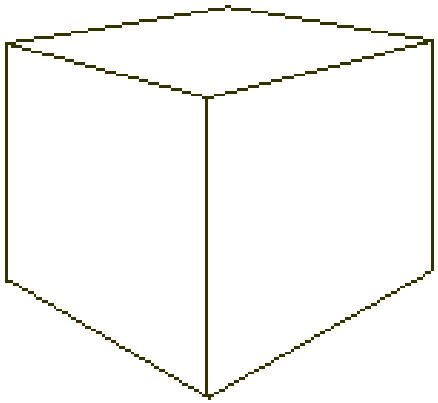

Object on HL, below, or above HL

- Do you see the differences?

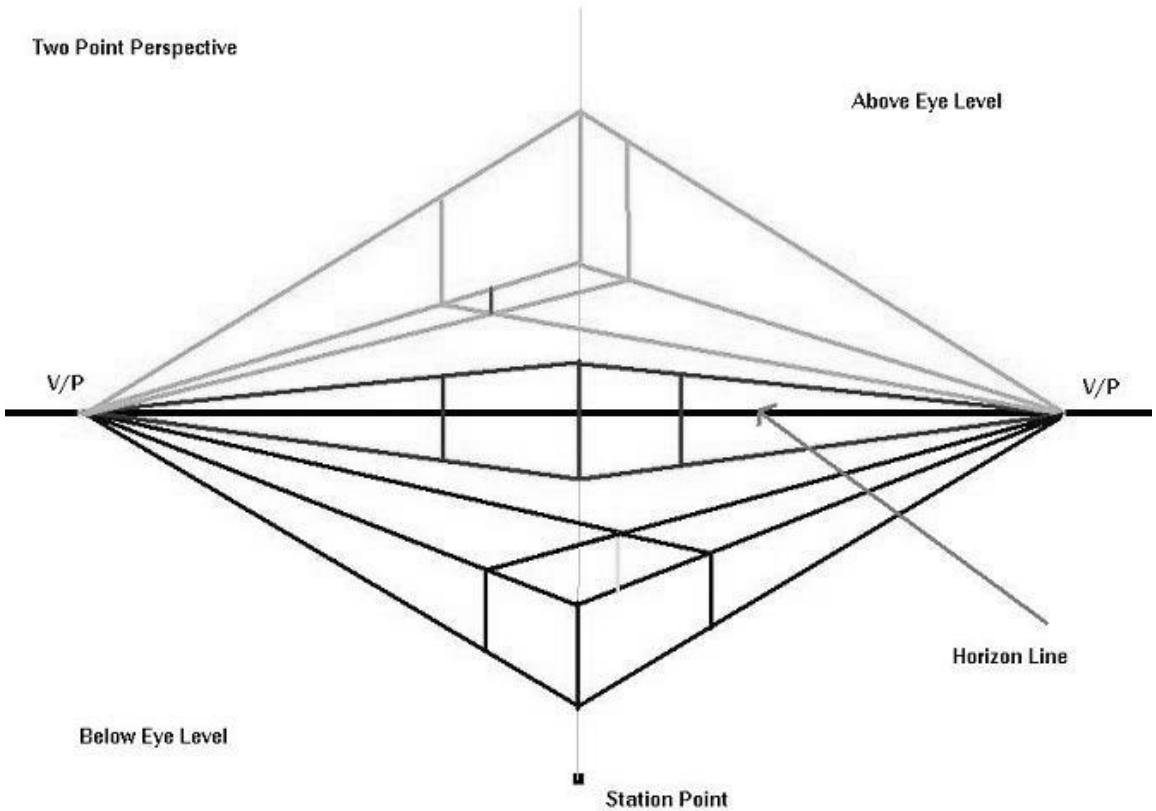

Exercise 1 - STAGE ONE – Drawing a cube

- Draw the HL then mark two vanishing points on *horizon line*
- Then draw one side/edge of the cube beneath the horizon line and at the center between the vanishing points

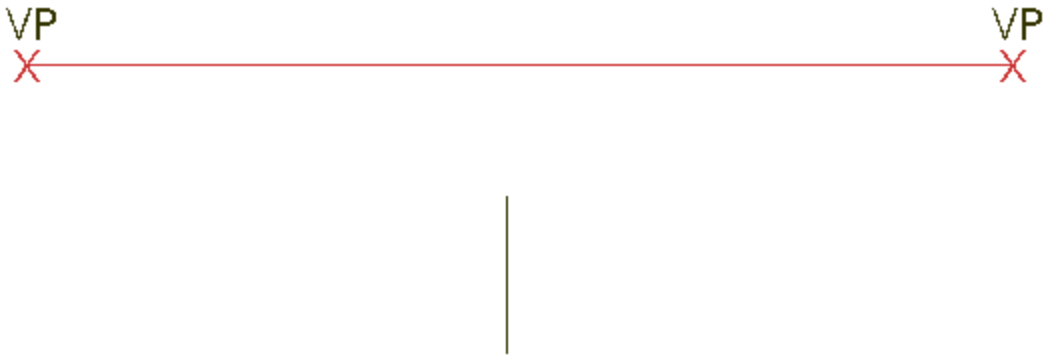

STAGE TWO

- Draw faint lines from the ends of the edge of the cube to the vanishing points

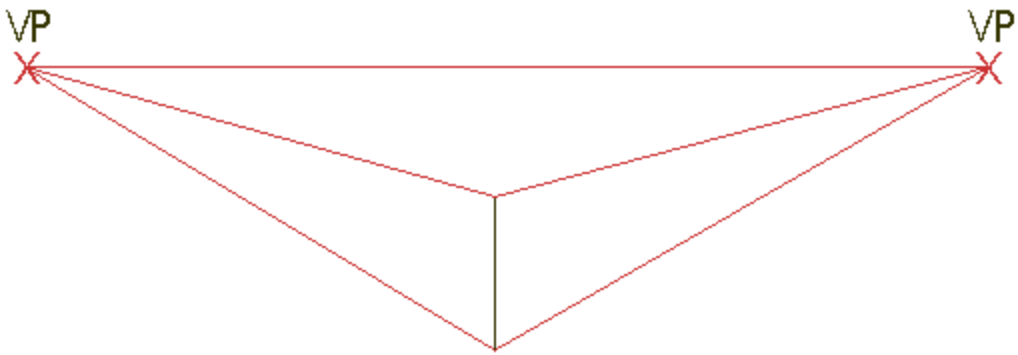

STAGE THREE

- Draw two more edges of the cube, unequal or equal distance (asymmetrical or symmetrical)

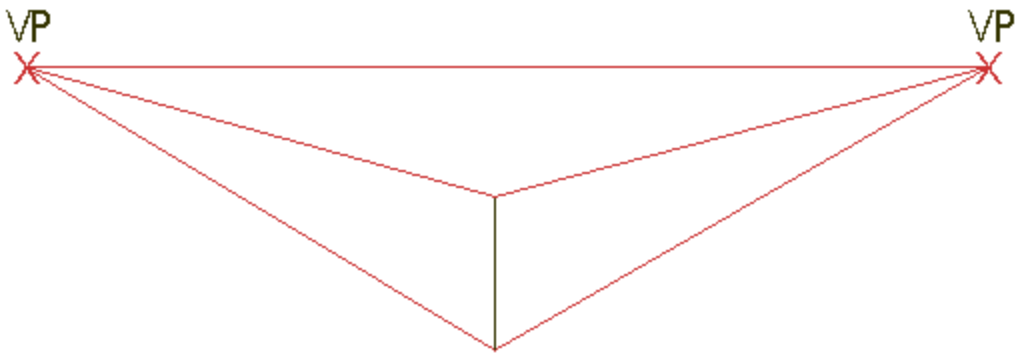

STAGE FOUR

- Draw faint guidelines from the ends of these vertical (parallel) lines to the opposite side of vanishing points

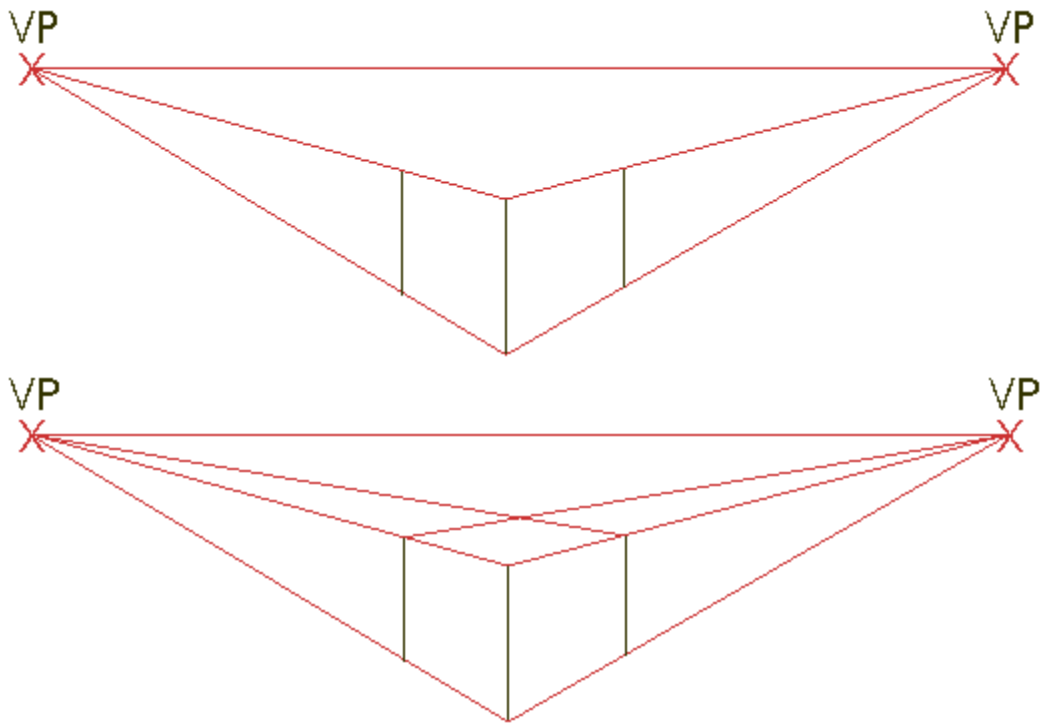

STAGE FIVE

- Use a dark pencil to draw over the outline (profile) of the cube
  - Show line weights

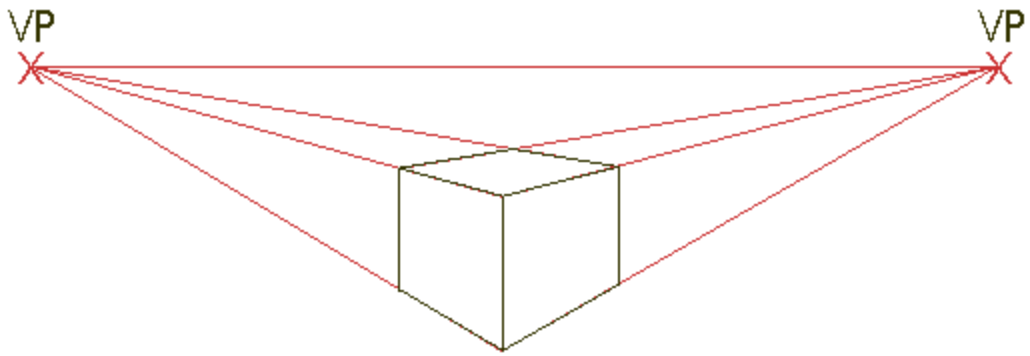

Exercise 2

- Draw the HL then mark two vanishing points
- Then draw one side/edge of the cube on the horizon line and towards to the right vanishing point

- Draw faint lines from the ends of the edge of the cube to the vanishing points
- Draw two more edges of the cube
- Which surface/plane of the cube will show more area?

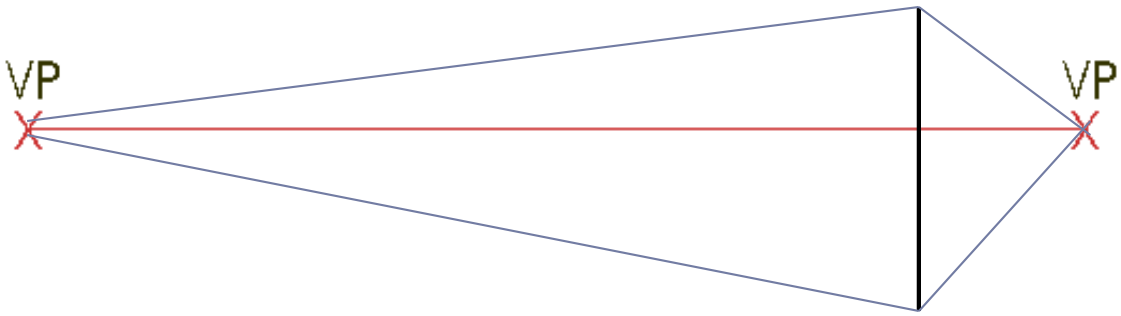

- Draw two more edges of the cube, left side show more surface than right (because object is closer to RVP)
  - Will not show equal distance on both sides because cube isn't in the center between both vanishing points

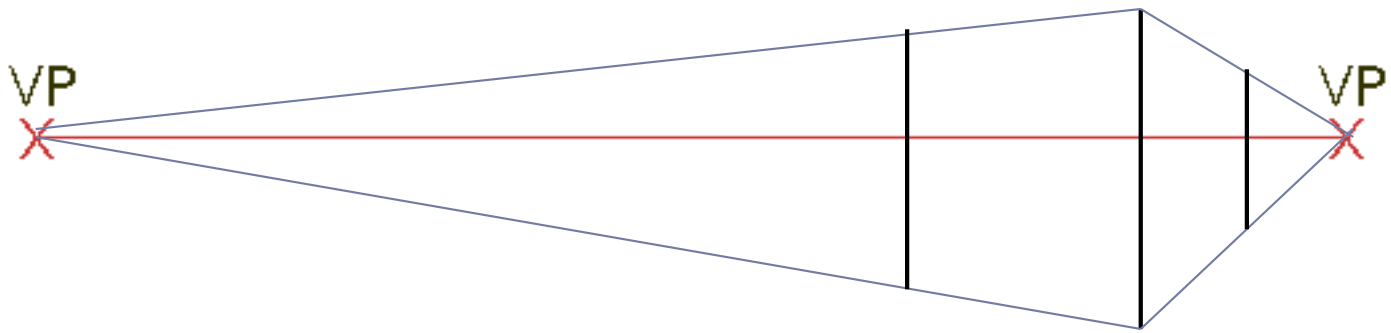

The result

- Use a dark pencil to draw over the outline (profile) of the cube
  - Show line weights
- More area showing on the left plane than the right plane

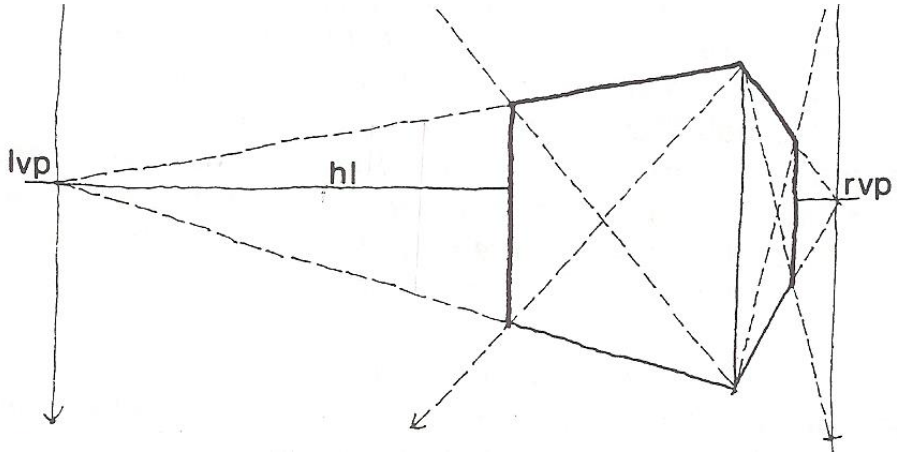

Exercise 3

- Draw the HL then mark two vanishing points
- Then draw one side/edge of the cube on the horizon line and towards to the left vanishing point
- Which surface/plane of the cube will show more area?
  - Show line weights

The result

- More area showing on the right plane than the left plane

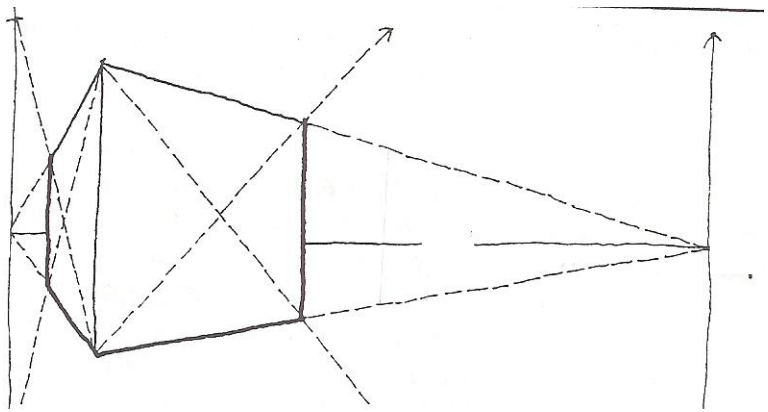

Exercise 4

- Draw all the cubes above and below the HL and compare them
- Briefly explain your observation with all the different views

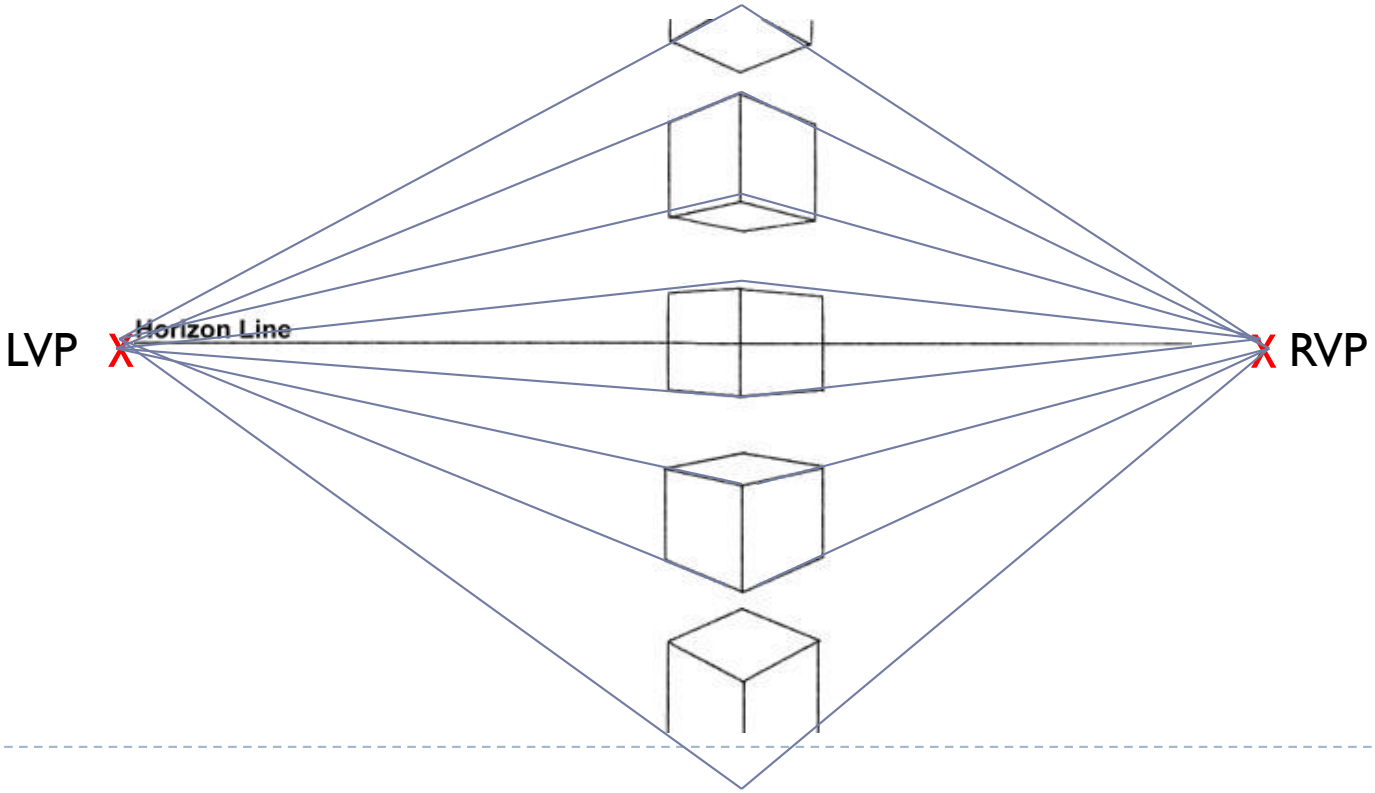

Exercise 5

- Draw a perspective drawing by showing all the surrounding planes
  - Side walls, ceiling, and ground floor
- Then construct all the cubes in the drawing
  - Place all the cubes at the right location (relatively from the HL)
- Use a dark pencil to draw over the profile of the cube
  - Show line weights
- It is important to show all the surrounding planes

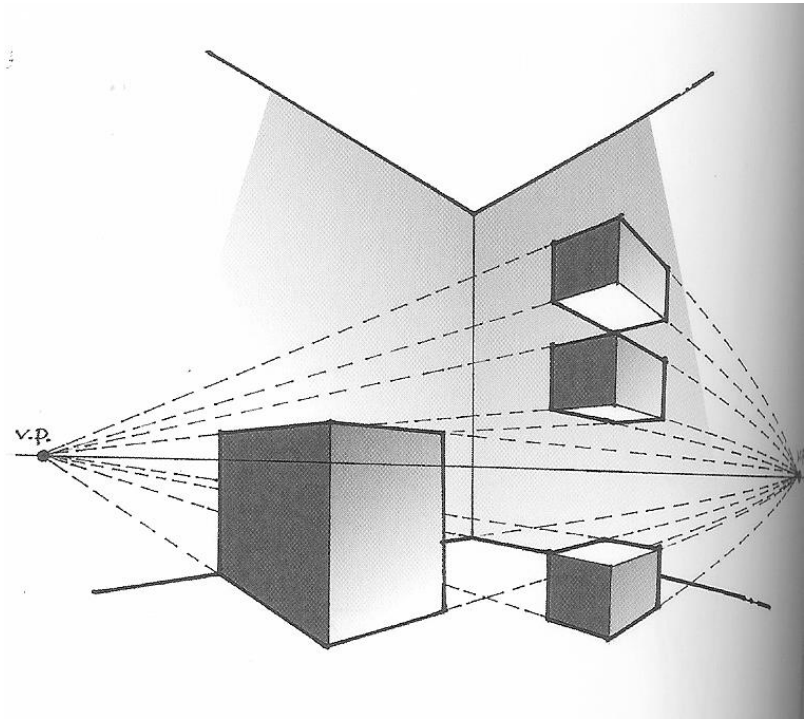

Exercise 6 - Compare the cubes in both rooms

- Two-points

- Compare the two-points to the one-point perspective
- Briefly explain your observation

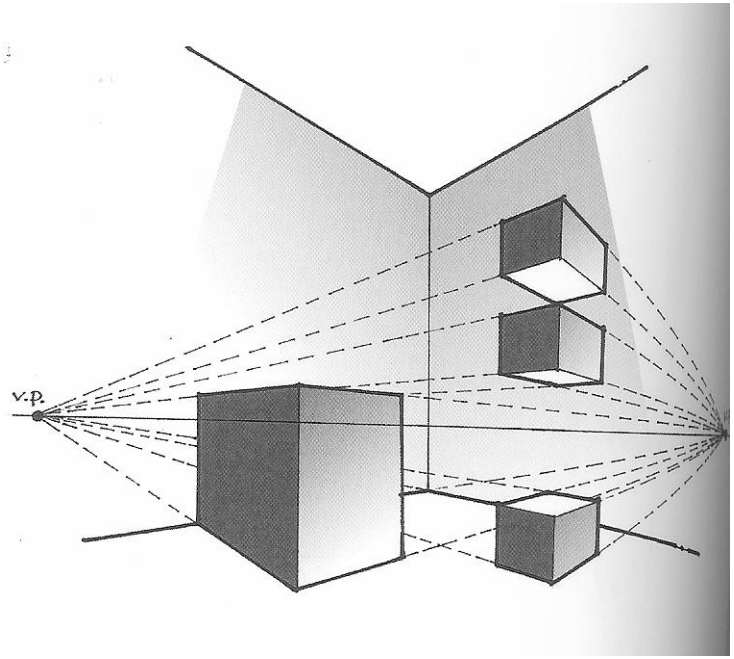

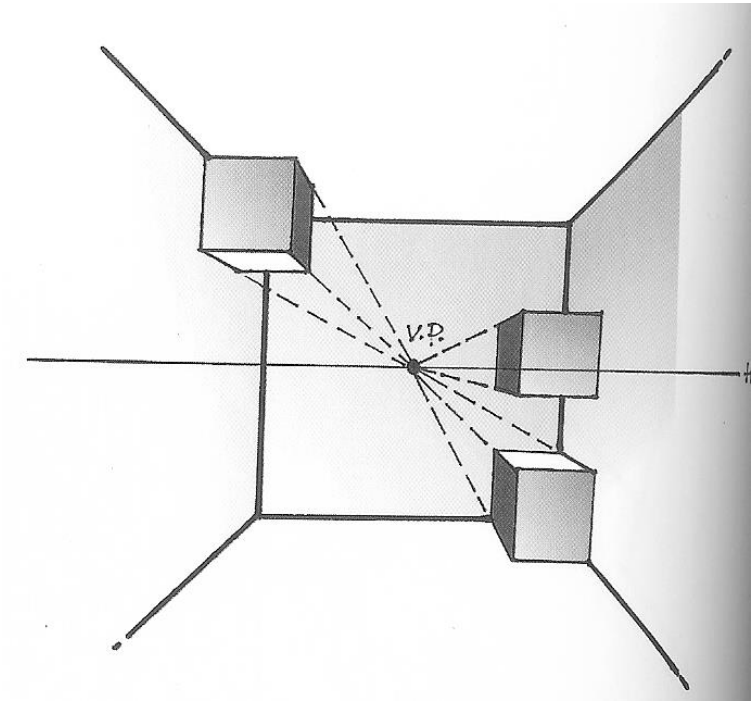

Exercise 7

- Complete the following perspective drawing of the 'L' shape

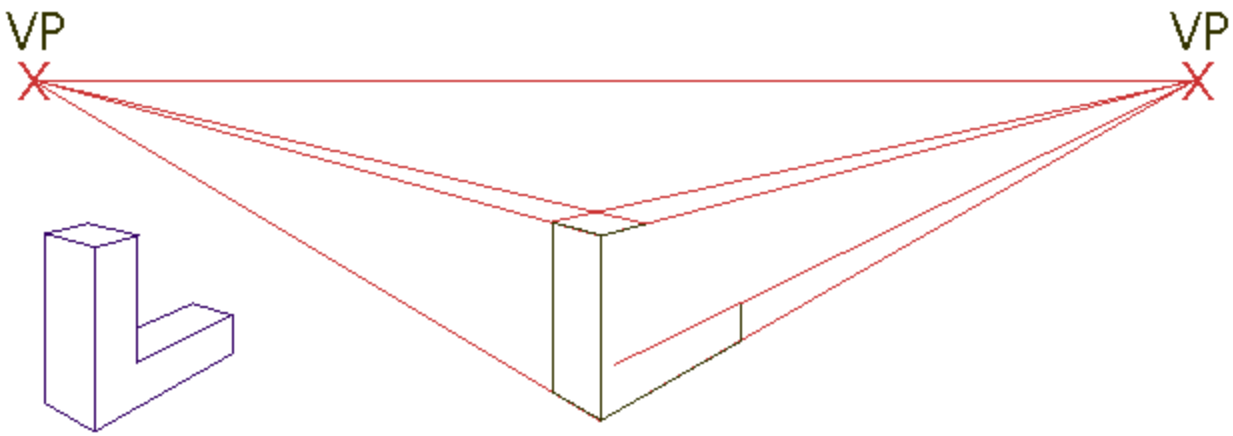

Exercise 8 - Draw a cylinder

- Starts by using cube construction method
- Now draw two line in a cross shape from the top square both mid points then add two diagonal lines from the corners
- Connect the arches (look like eclipse) on the top plane then repeat the same process from the bottom plane

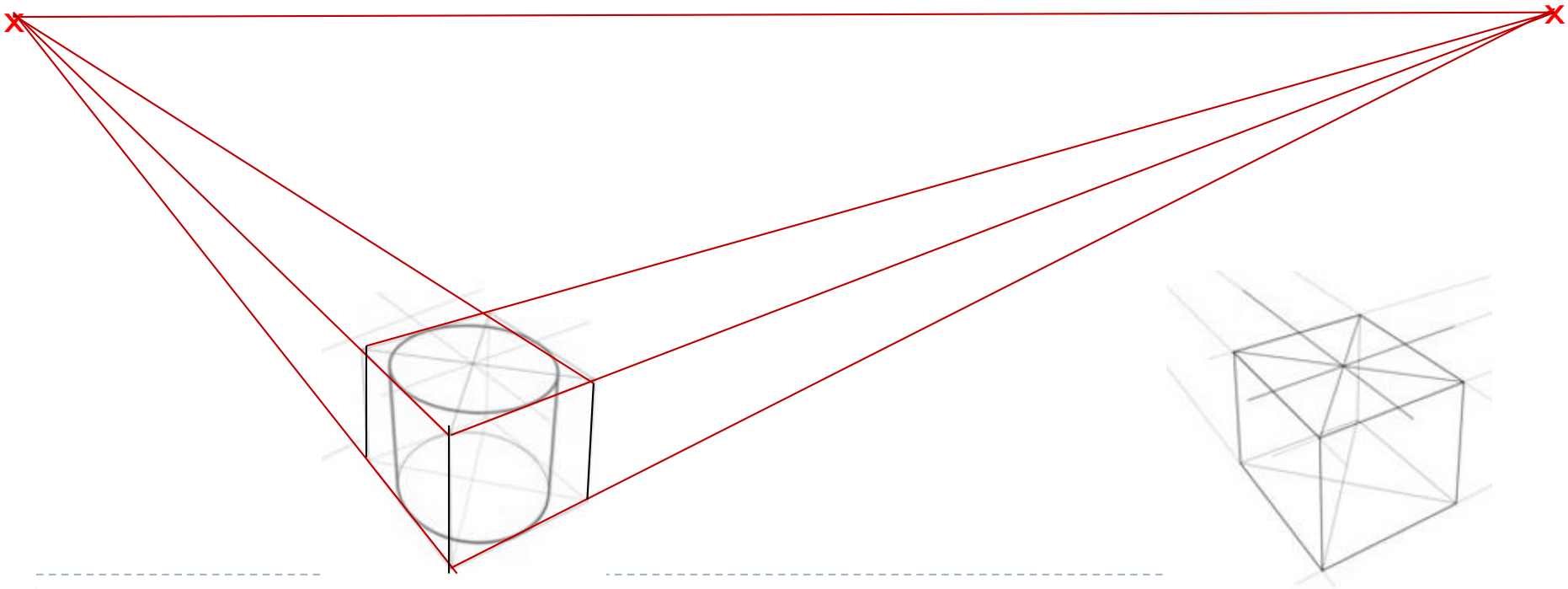

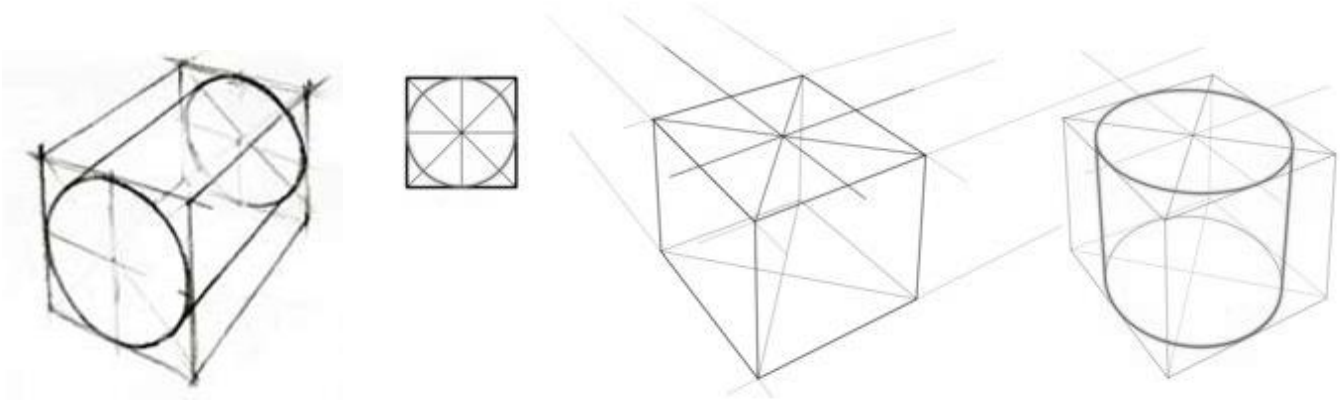

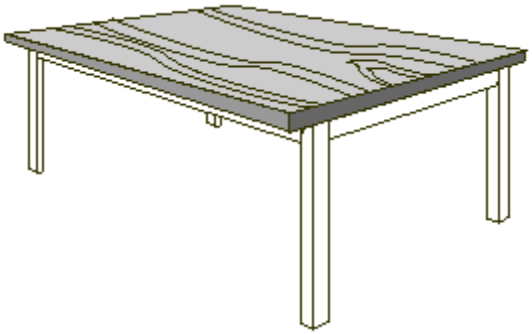

Dining table in 2 points perspective

Dining table – rectangular table

- A simple dining table is drawn in two point perspective
- This is much more difficult compared to the single point
- Very important to *project* guidelines towards both vanishing points

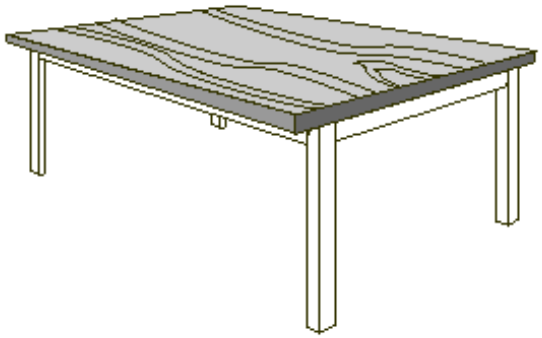

STAGE ONE

- Faintly draw a HL then mark two vanishing points
- Then draw a faint vertical line beneath the HL in the center between the vanishing points (to locate a side of the table)
- Draw a rectangular table (longer on the left side)
- Faintly draw lines from the top of the vertical line to the vanishing points
- Use light line weight to draw the table top

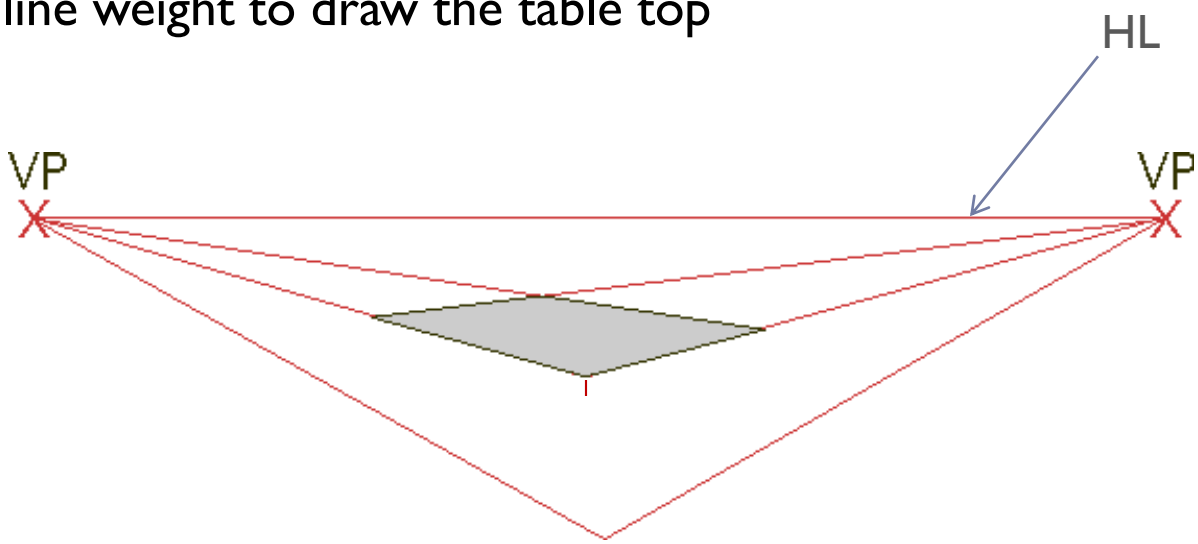

STAGE TWO

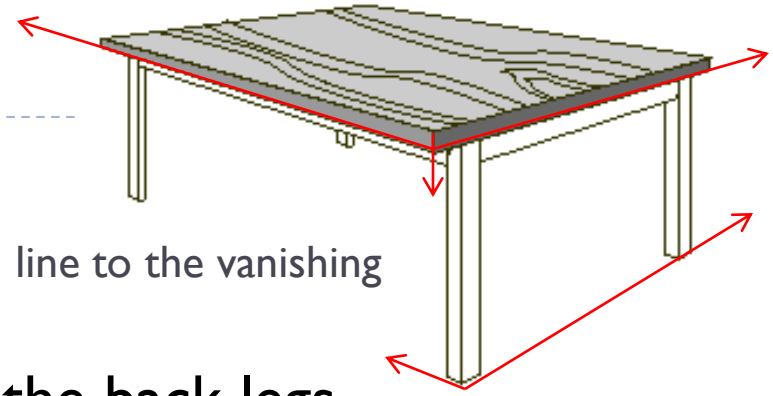

- Add thickness to the table top
  - Faintly draw lines from the bottom of the vertical line to the vanishing points
- Add the front legs (square legs) then the back legs
  - remember to add the thickness

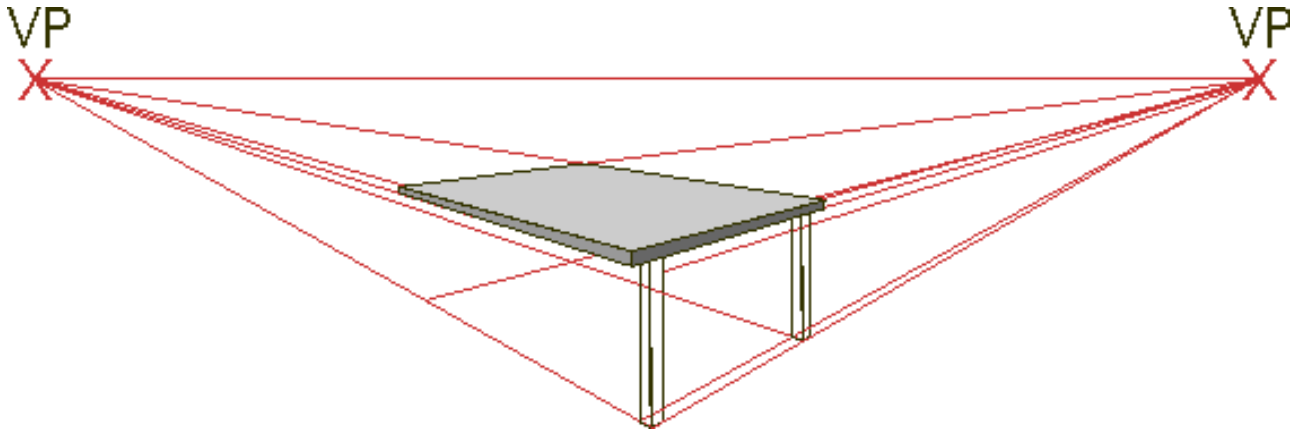

STAGE THREE

- Then add the left back leg

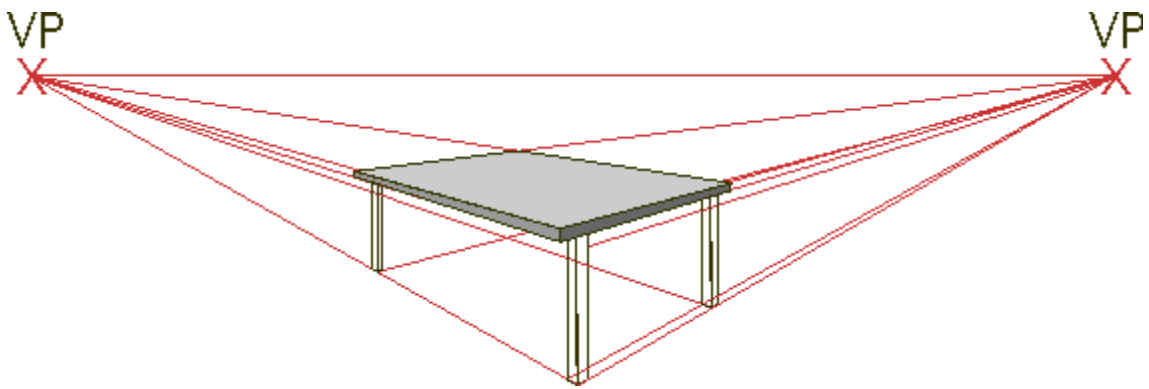

STAGE FOUR

- Add the final back leg
  - Show details
  - Show line weights

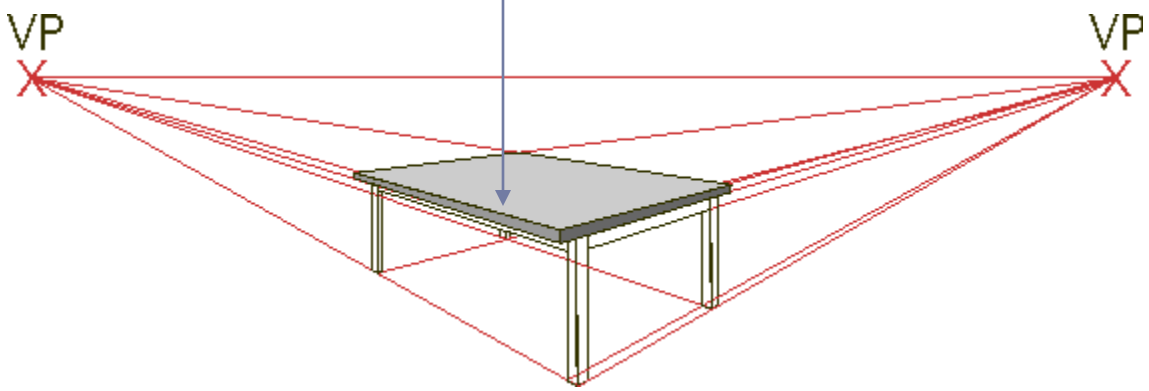

What have you learned?

- Object on HL, below, or above HL
  - Explain the differences
- Explain the sequences and steps how to draw a cube
- What need to turn in?